The 2mm Scale Association

2FS Track and Wheel Standards Diagram

Drawn PJ Copleston 1993

© The 2mm Scale Association 2025

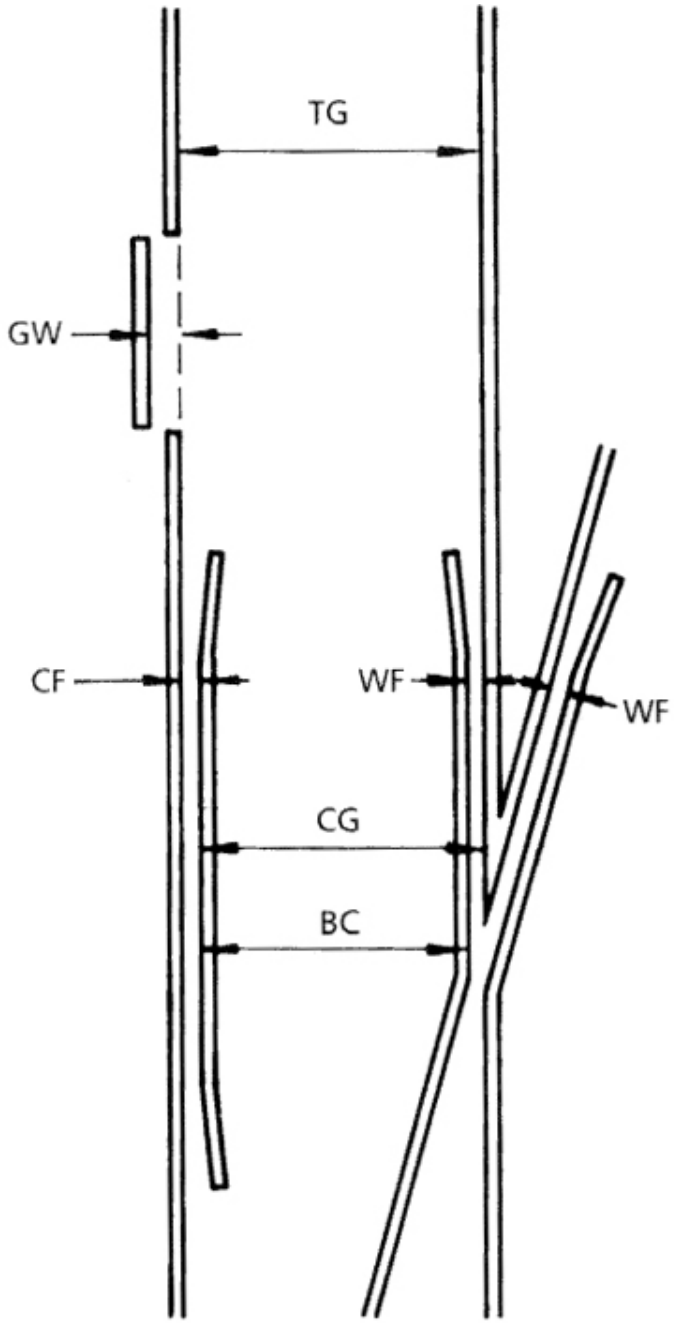

Track Clearances

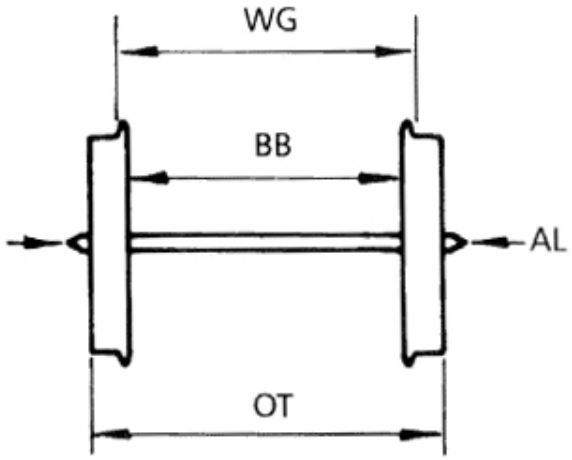

Wheelset Dimensions

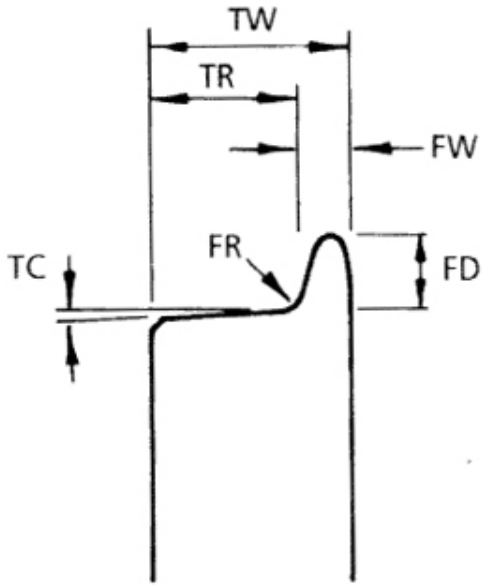

Wheel Profile

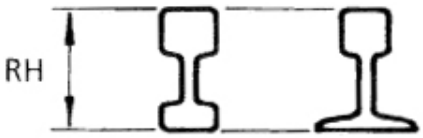

Track and Wheel Standards

TRACK DIMENSIONS Prototype Track Gauge		Prototype Dimensions Standard Gauge	True Scale 1:152.4 Standard Gauge	Constants	Tolerance	Standard Gauge 4ft 8½in	Irish Broad Gauge 5ft 3in	Brunel Broad Gauge 7ft 0¼in
TG	track gauge	1435 (4' 8½")	9.42		min.	9.42	10.50	14.04
GW	gauge widening	19.05 (¾")	0.12	0.10		under 24" radius	under 28" radius	under 36" radius
WF	wing-rail flangeway			0.48	±0.03			
CF	check-rail flangeway	44.45 (1¾")	0.29	0.50	±0.03			
CG	check gauge	1390 (4' 6¾")	9.12		min.	8.94	10.02	13.56
BC	between checks				max.	8.38	9.46	13.00
RH	recommended rail height in thou (code)					Code 40	Code 40	Code 40

WHEEL DIMENSIONS Prototype Track Gauge		Prototype Dimensions Standard Gauge	True Scale 1:152.4 Standard Gauge	Constants	Tolerance	Standard Gauge 4ft 8½in	Irish Broad Gauge 5ft 3in	Brunel Broad Gauge 7ft 0¼in
WG	wheel gauge				max.	9.12	10.23	
BB	back-to-back	1362 (4' 5⅝")	8.93		min. max.	8.51	9.59 9.66	13.13
OT	over tyre faces				max.	11.10	12.18	15.73
AL	recommended axle length				max.	12.25	13.00	16.75
TW	tyre width	139.7 (5½")	0.91	1.30				
TR	tread width			1.00				
FW	flange width			0.30				
FD	flange depth	28.5 (1⅛")	0.19	0.51				
FR	flange-tyre radius			0.13				
TC	tyre coning (degrees)			3°				

Dimensions above are in millimetres, those in parentheses are in feet and inches.

The 2mm Scale Association

2FS Loading Gauge and Clearances Diagram

Drawn PJ Copleston 1993

© The 2mm Scale Association 2025

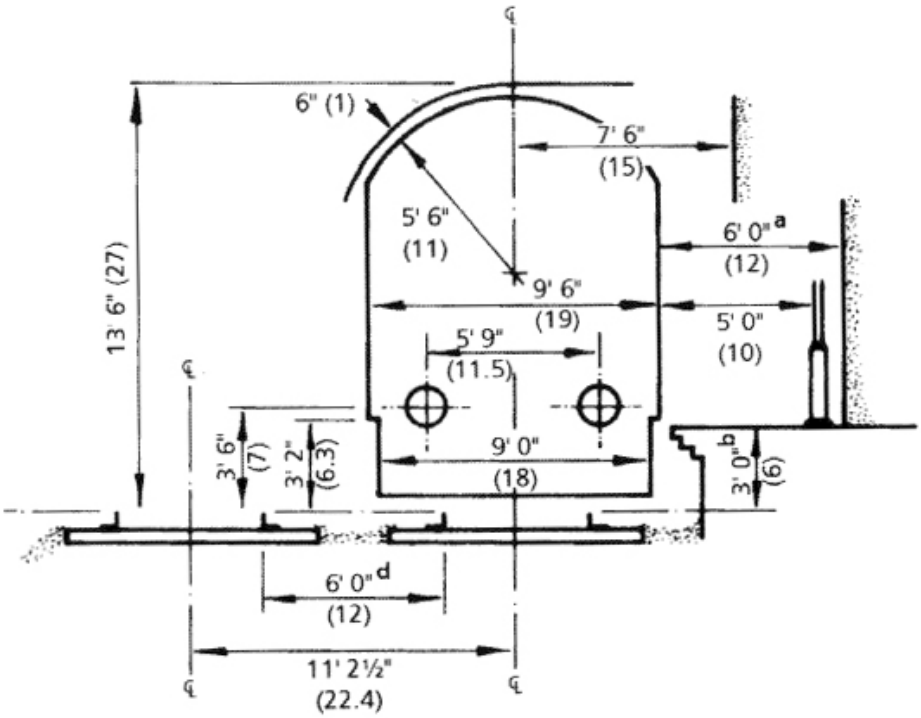

BRITISH LOADING GAUGE AND CLEARANCES

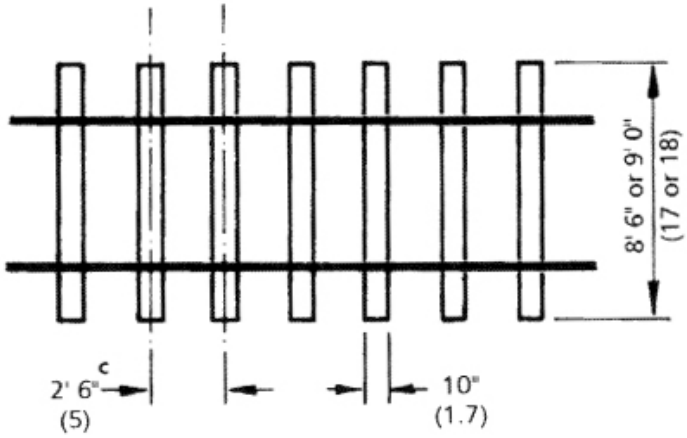

BRITISH TRACK SLEEPERING

Based on Ministry of Transport Requirements 1950

Earlier company or individual lines may vary from these specifications.

Side clearances may need to be increased on curves.

Prototype dimensions in feet and inches.

Model dimensions, in brackets, at 2mm/1ft scale in millimetres.

a. Minimum distance of buildings and other obstructions from platform edge.
b. Older platforms may only be 2'6" to 2'9" above rail level.
c. Average dimensions only.
d. 10'0" (20mm) between sidings and main line.

The 2mm Scale Association

2FS Wagon Underframe and Wheelset Standards Diagram

Drawn WJ Blackburn 1995

© The 2mm Scale Association 2025

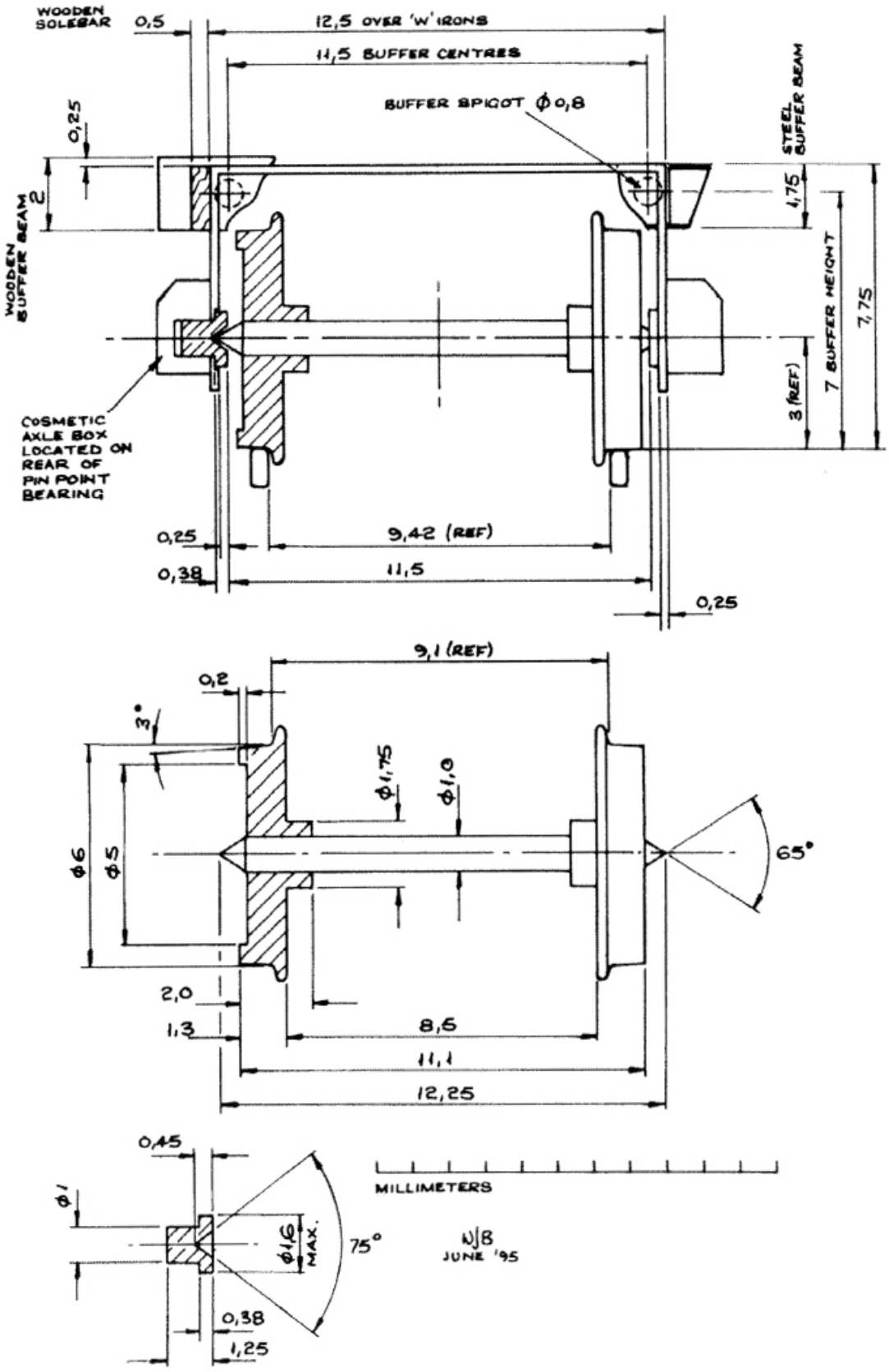

The 2mm Scale Association

2FS Locomotive Wheel and Muff and Tyre Standards

Drawn WJ Blackburn 1995

© The 2mm Scale Association 2025

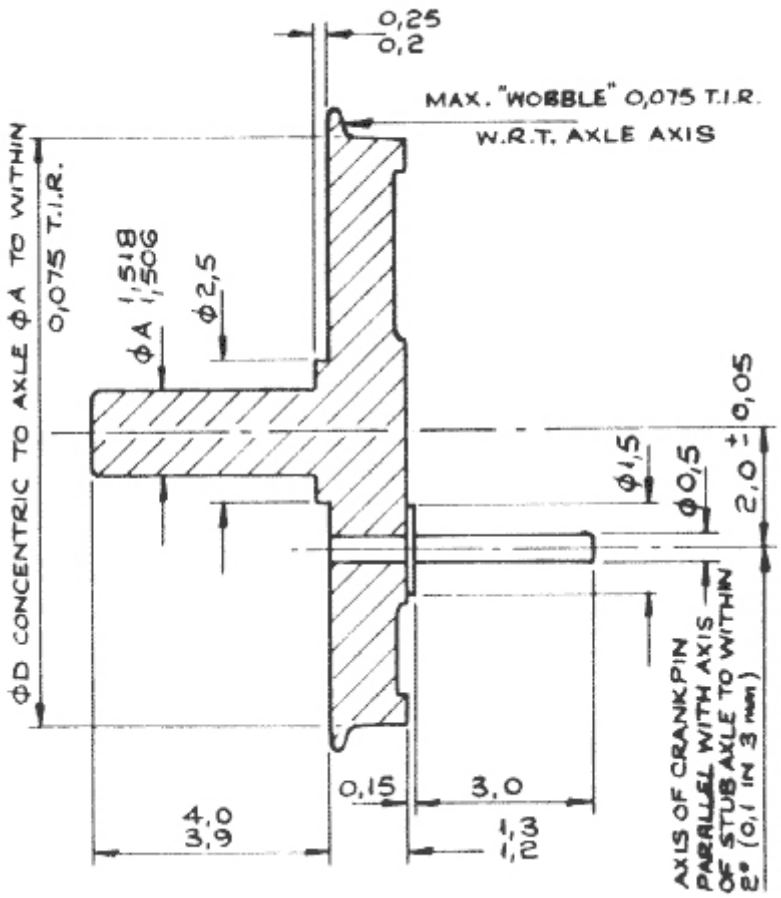

LOCOMOTIVE WHEEL STANDARD DIMENSIONS

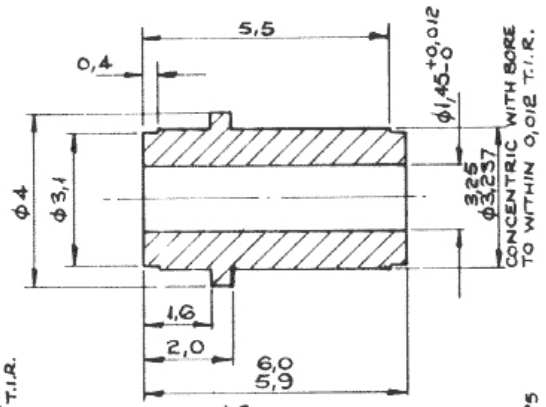

LOCOMOTIVE WHEEL MUFF

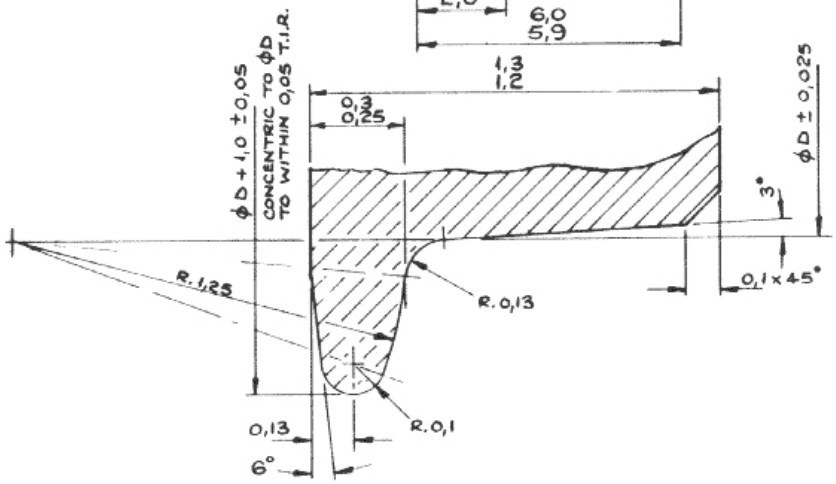

LOCOMOTIVE TYRE DETAIL

The 2mm Scale Association

2FS Locomotive Chassis Assembly Dimensions and Tolerances

Drawn WJ Blackburn 1995

© The 2mm Scale Association 2025

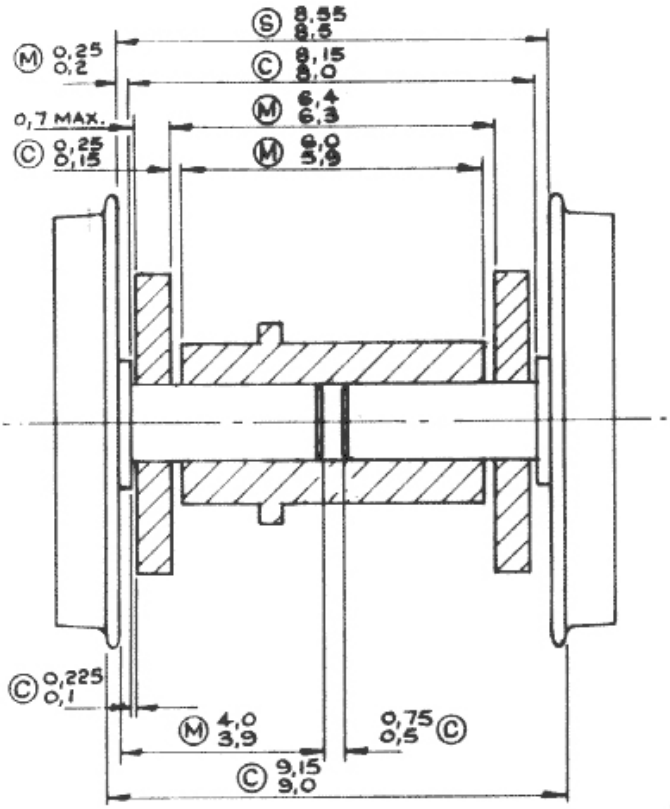

SUGGESTED DIMENSIONS AND TOLERANCES

With wheel back-to-back dimension set as **S** and component parts manufactured within tolerances **M** consequential dimensions will be as **C**.

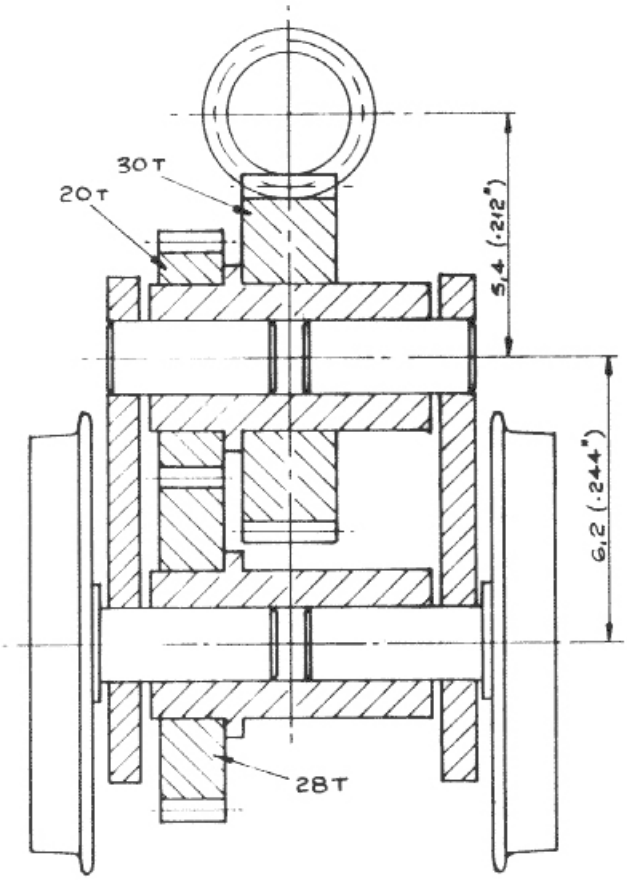

EXAMPLE OF DOUBLE REDUCTION MECHANISM

Combination of 30:1 skew gear and worm along with 20T and 28T spur gears gives an overall reduction of 42:1.